Số và ký hiệu: 303/QĐ - ĐLDK
Ngày ban hành: 24/03/2025

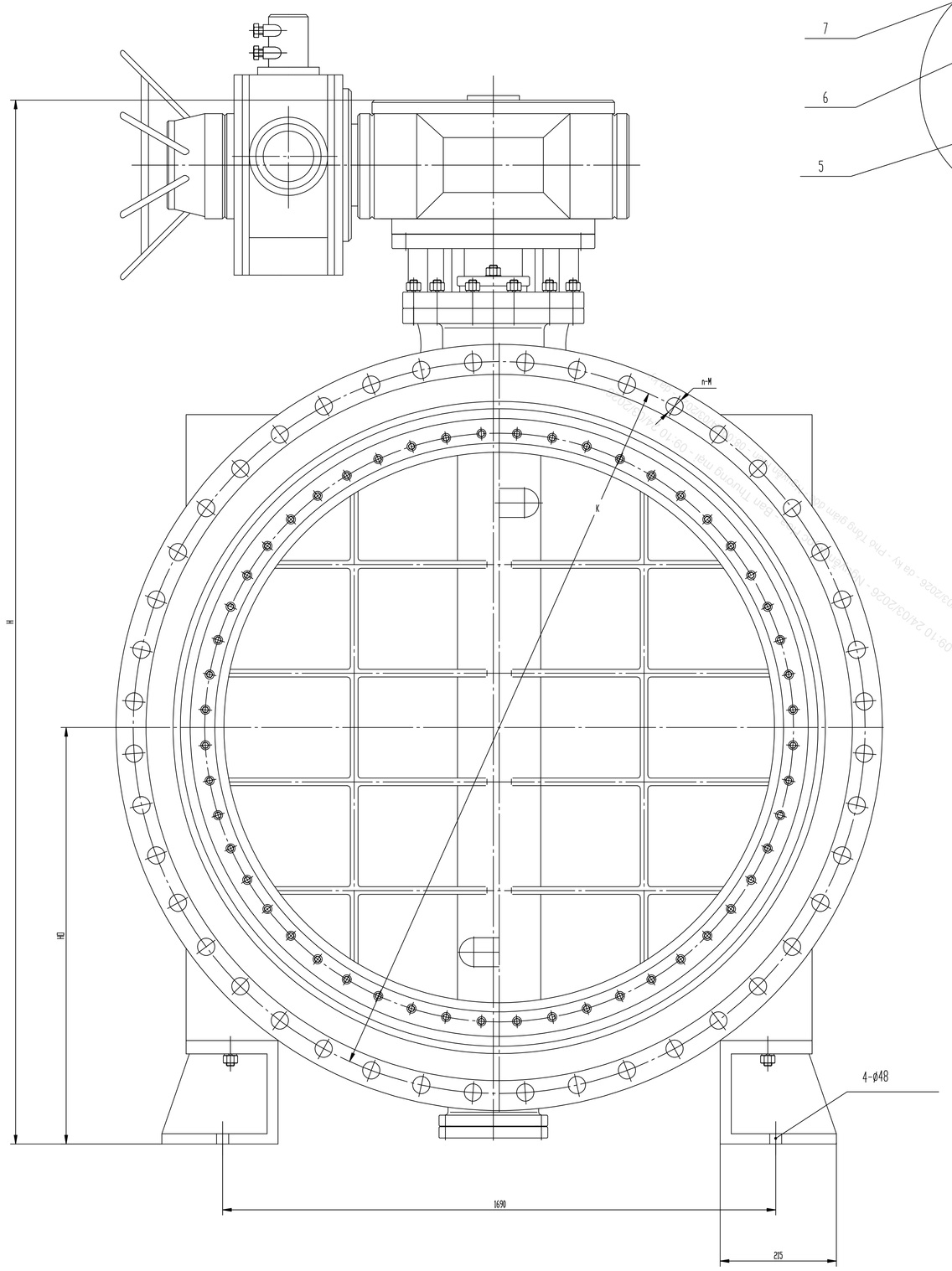

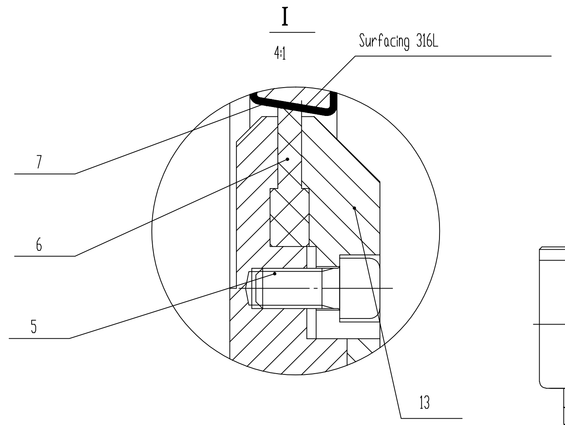

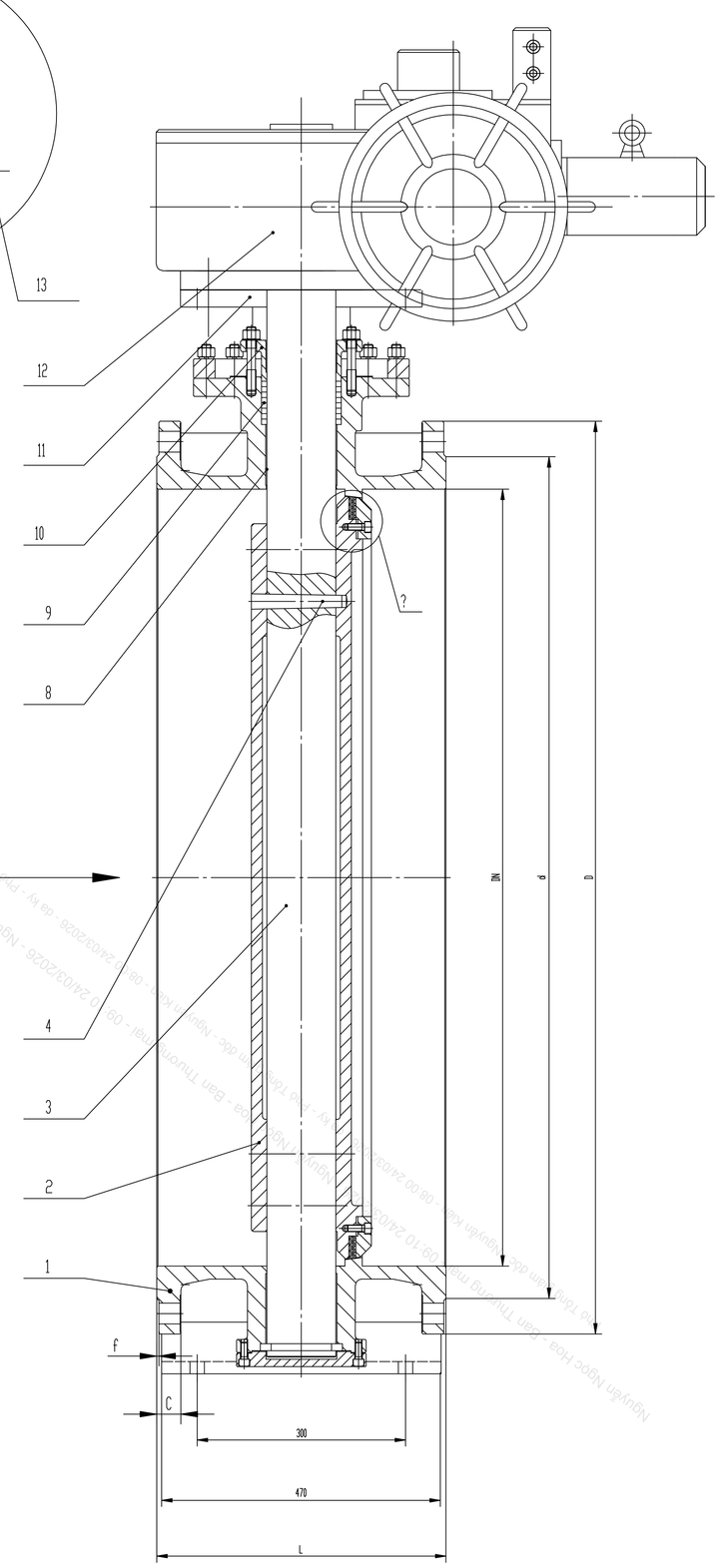

No.	Name	Materials
1	Body	STQNiCr
2	Disc	STQNiCr
3	Stem	F51
4	Pin	316L
5	Bolt	316L
6	Seal Ring	EPDM
7	Body seal	316L
8	Bearing	SF-1
9	Packing	Graphite
10	Gland	WCB
11	Yoke	WCB
12	Electric equipment	Assembly
13	Plate	316L

Performance Specifications

DN	DN1800	
PN	PN 6	
Strength test	0.9	MPa
Seal test	0.66	
Gas seal test	0.6	
Temperature:?120		
Medium: Recycled water etc.		

Technical Requirements

1, Design, manufacturing technology required by the requirements of API 609-2005;
2, Face to face dimension according to the requirements of API609-2005;
3, Flange connection dimension according to the provisions of EN 1092-12001;
4, Test and inspection according to the requirements of MSS-SP-61;
5, Feet dimension need the customer to confirm.

DN	PN	L	D	K	n-M	d	f	C	H	HO	Weight(Kg)
1800	6	490	2045	1970	44-Ø39	1918	5	50	2950	1180	4870

DRAWING SUBMISSION STATUS: FC

REV	DATE	DESCRIPTION	DRWN	CHKD	APPD
0	20.11.2014	For Construction	Duan Baoqi	Luo Weiming	Lu Peiwen
A	06.06.2011	INITIAL ISSUE	Duan Baoqi	Luo Weiming	Lu Peiwen

OWNER: VIETNAM OIL AND GAS GROUP (PVN)
OWNER'S CONSULTANT: POYRY ENERGY LTD
EPC CONTRACTOR: VIETNAM MACHINERY INSTALLATION CORPORATION (LILAMA)
EPC CONTRACTOR'S CONSULTANT: FICHTNER GmbH & Co. KG

PROJECT TITLE: VUNG ANG 1 THERMAL POWER PLANT 2 x 600MW
M_LOT1D-BOP OF TURBINE

CONTRACT No. 290110/LILAMA-DEC

DRAWING TITLE: Outline of motor driven butterfly valve(1800D942XH-6Q sheet 2 of 3)

SXED BEIJING VALVE GENERAL FACTORY GROUP CO.,LTD OF P.R.C.

FUNCTION	NAME	SIGN
APPROVED BY	Lu Peiwen	陆培文
EXAMED BY	Yang Jingsheng	杨京生
CHECKED BY	Luo Weiming	罗维明
DESIGNED BY	Duan Baoqi	段宝琦
TRACED BY		
DATE	06.06.2011	
SCALE	1:15	

Detail STAGE EDITION
Motor Driven Butterfly Valve
DRAW NO. 1800D942XH-6Q-00

SUB-CONTRACTOR: DEC 东方电气 DONGFANG ELECTRIC

FUNCTION	NAME	SIGN	DATE
DRWN	Duan Baoqi	段宝琦	20.11.2014
CHKD	Luo Weiming	罗维明	20.11.2014
APPD	Lu Peiwen	陆培文	20.11.2014

DOCUMENT No. VA1-DEC-001100-M-M1D-DRD-4006
SCALE 1:15 REV 0